Autodesk®
Visual Effects and Finishing 2010

# HP® xw9400 Workstation Hardware Setup Guide

Autodesk®

© 2009 Autodesk, Inc. All rights reserved. Except as otherwise permitted by Autodesk, Inc., this publication, or parts thereof, may not be reproduced in any form, by any method, for any purpose.

Certain materials included in this publication are reprinted with the permission of the copyright holder.

Autodesk® Inferno®, Autodesk® Flame®, Autodesk® Flint®, Autodesk® Fire®, Autodesk® Smoke®, Autodesk® Backdraft® Conform software

Portions relating to MXF-SDK was developed by Media, Objects and Gadgets – Soluçoes de Software e Hardware, S.A. (http://www.mog-solutions.com) in co-operation with Institut für Rundfunktechnik GmbH (http://www.irt.de).

Portions powered by Automatic Duck. © 2006 Automatic Duck, Inc. All rights reserved.

Portions relating to "dslib" C/C++ Copyright 1988-1989 Eugene Dronek and Rich Morin.

Autodesk® Flare™ software

Portions relating to MXF-SDK was developed by Media, Objects and Gadgets – Soluçoes de Software e Hardware, S.A. (http://www.mog-solutions.com) in co-operation with Institut für Rundfunktechnik GmbH (http://www.irt.de).

Portions powered by Automatic Duck. © 2006 Automatic Duck, Inc. All rights reserved.

Portions relating to "dslib" C/C++ Copyright 1988-1989 Eugene Dronek and Rich Morin.

Portions relating to MPEG Layer- 3; supply of this product does not convey a license under the relevant intellectual property of Thomson multimedia and/or Fraunhofer Gesellschaft nor imply any right to use this product in any finished end user or ready-to-use final product. An independent license for such use is required. For details, please visit http://www.mp3licensing.com.

Autodesk® SystemCentral™ software
Adobe® Flash® Player. Copyright © 1996-2006 Adobe Systems Incorporated. All Rights Reserved.

Autodesk® Inferno®, Autodesk® Flame®, Autodesk® Flint®, Autodesk® Smoke®, Autodesk® Backdraft® Conform

Portions relating to MPEG Layer- 3; supply of this product does not convey a license under the relevant intellectual property of Thomson multimedia and/or Fraunhofer Gesellschaft nor imply any right to use this product in any finished end user or ready-to-use final product. An independent license for such use is required. For details, please visit http://www.mp3licensing.com.

## Trademarks

The following are registered trademarks or trademarks of Autodesk, Inc., in the USA and other countries: 3DEC (design/logo), 3December, 3December.com, 3ds Max, ADI, Alias, Alias (swirl design/logo), AliasStudio, Alias|Wavefront (design/logo), ATC, AUGI, AutoCAD, AutoCAD Learning Assistance, AutoCAD LT, AutoCAD Simulator, AutoCAD SQL Extension, AutoCAD SQL Interface, Autodesk, Autodesk Envision, Autodesk Insight, Autodesk Intent, Autodesk Inventor, Autodesk Map, Autodesk MapGuide, Autodesk Streamline, AutoLISP, AutoSnap, AutoSketch, AutoTrack, Backdraft, Built with ObjectARX (logo), Burn, Buzzsaw, CAiCE, Can You Imagine, Character Studio, Cinestream, Civil 3D, Cleaner, Cleaner Central, ClearScale, Colour Warper, Combustion, Communication Specification, Constructware, Content Explorer, Create>what's>Next> (design/logo), Dancing Baby (image), DesignCenter, Design Doctor, Designer's Toolkit, DesignKids, DesignProf, DesignServer, DesignStudio, Design|Studio (design/logo), Design Web Format, Discreet, DWF, DWG, DWG (logo), DWG Extreme, DWG TrueConvert, DWG TrueView, DXF, Ecotect, Exposure, Extending the Design Team, Face Robot, FBX, Filmbox, Fire, Flame, Flint, FMDesktop, Freewheel, Frost, GDX Driver, Gmax, Green Building Studio, Heads-up Design, Heidi, HumanIK, IDEA Server, i-drop, ImageModeler, iMOUT, Incinerator, Inferno, Inventor, Inventor LT, Kaydara, Kaydara (design/logo), Kynapse, Kynogon, LandXplorer, LocationLogic, Lustre, Matchmover, Maya, Mechanical Desktop, Moonbox, MotionBuilder, Movimento, Mudbox, NavisWorks, ObjectARX, ObjectDBX, Open Reality, Opticore, Opticore Opus, PolarSnap, PortfolioWall, Powered with Autodesk Technology, Productstream, ProjectPoint, ProMaterials, RasterDWG, Reactor, RealDWG, Real-time Roto, REALVIZ, Recognize, Render Queue, Retimer,Reveal, Revit, Showcase, ShowMotion, SketchBook, Smoke, Softimage, Softimage|XSI (design/logo), SteeringWheels, Stitcher, Stone, StudioTools, Topobase, Toxik, TrustedDWG, ViewCube, Visual, Visual Construction, Visual Drainage, Visual Landscape, Visual Survey, Visual Toolbox, Visual LISP, Voice Reality, Volo, Vtour, Wire, Wiretap, WiretapCentral, XSI, and XSI (design/logo).

The following are registered trademarks or trademarks of Autodesk Canada Co. in the USA and/or Canada and other countries: Backburner, Multi-Master Editing, River, and Sparks.

The following are registered trademarks or trademarks of Moldflow Corp. in the USA and/or other countries: Moldflow MPA, MPA (design/logo), Moldflow Plastics Advisers, MPI, MPI (design/logo), Moldflow Plastics Insight, MPX, MPX (design/logo), Moldflow Plastics Xpert.

Adobe and Flash are either trademarks or registered trademarks in the United States and/or countries. Automatic Duck and the duck logo are trademarks of Automatic Duck, Inc. FFmpeg is a trademark of Fabrice Bellard, originator of the FFmpeg project. Python is a registered trademark of Python Software Foundation. All other brand names, product names or trademarks belong to their respective holders.

THIS PUBLICATION AND THE INFORMATION CONTAINED HEREIN IS MADE AVAILABLE BY AUTODESK, INC. “AS IS.” AUTODESK, INC. DISCLAIMS ALL WARRANTIES, EITHER EXPRESS OR IMPLIED, INCLUDING BUT NOT LIMITED TO ANY IMPLIED WARRANTIES OF MERCHANTABILITY OR FITNESS FOR A PARTICULAR PURPOSE REGARDING THESE MATERIALS.

Published by: Autodesk, Inc.
111 McInnis Parkway
San Rafael, CA 94903, USA

Title: Autodesk Visual Effects and Finishing 2010 Edition HP xw9400 Hardware Setup Guide
Document Version: 2
Date: December 16, 2009

# Contents


**Chapter 1 Introduction . . . 1**

About This Guide . . . 1
Related Documentation . . . 1
Notation Conventions . . . 2
Contacting Customer Support . . . 2

**Chapter 2 Getting Started . . . 3**

Workflow for Hardware Setup and Application Installation . . . 3
Hardware Configuration Guidelines . . . 4
- Memory Requirements . . . 4
- Ensuring Proper Environmental Conditions . . . 4
- Power and Air Conditioning Requirements . . . 5
- Rack Mount Requirements . . . 5
- Avoiding Damage from Static Electricity . . . 6
- Grounding Audio Hardware Components . . . 6
- Receiving Your Shipment . . . 6

BIOS and Firmware . . . 7
- System BIOS . . . 7
- DVI-Ramp Firmware . . . 9
- AJA OEM-2K PCI-X Firmware . . . 10

**Chapter 3 Connecting Peripherals . . . 13**

Peripherals Connection Diagrams . . . 13
Connecting the Keyboard, Mouse, and Tablet . . . 15
Network Connections . . . 16
- Connecting to Gigabit Ethernet (GigE) Networks . . . 16
- Connecting to the Infiniband (IB) Network . . . 16

**Chapter 4 Setting Up Video Hardware . . . 17**

Video I/O Setup . . . 17

Video I/O Setup for Workstations Using a DVI-Ramp2 . . . 18
Video I/O Setup for Workstations Using the NVIDIA Quadro SDI Board . . . 20
Standard VTR Control Cable Pinout . . . 23
Setting Up VTR Emulation . . . 23
VTR Emulation RS-422 Control Cables . . . 24

**Chapter 5 Setting Up Audio Hardware . . . 29**
About Audio . . . 29
Audio Wiring Workflow . . . 29
Audio Hardware Components . . . 30
Understanding Remote vs. Local Control of the Lucid Converter . . . 30
Audio Wiring . . . 30
Configuring the Lucid ADA 88192 Converter . . . 31
Adjusting Lucid ADA 88192 Converter Settings . . . 32
Lucid ADA 88192 Converter Settings for Remote Control . . . 32
Lucid ADA 88192 Converter Settings for Local Control . . . 33
Audio Keywords in the Software Initialisation Configuration File . . . 33

**Chapter 6 Connecting Storage . . . 35**
Connecting Media Storage . . . 35
Overview . . . 35
About Autodesk Stone Direct Storage . . . 35
Connecting and Configuring the ATTO Fibre Channel Adapter . . . 37
Connecting Storage Enclosures . . . 37
XR 6500 Wiring Diagrams . . . 37
XR 6412 Wiring Diagrams . . . 40
XR 5402 and XR 5412 Wiring Diagrams . . . 42
Connecting Archiving Storage . . . 43
Filesystem Devices . . . 43
SCSI Tape Drive Devices . . . 43

**Index . . . 47**

# Introduction

# 1

**Topics in this chapter:**


- About This Guide on page 1
- Related Documentation on page 1
- Notation Conventions on page 2
- Contacting Customer Support on page 2


## About This Guide

This guide describes how to set up the HP® xw9400 workstation for your Autodesk® Visual Effects and Finishing application (Autodesk® Inferno®, Autodesk® Flame®, Autodesk® Flint®, Autodesk® Smoke®, Autodesk® Backdraft® Conform).

If you already own an HP xw9400 workstation that shipped with a previous release of a Visual Effects and Finishing application, you normally do not need to change its configuration. But you do need to verify its BIOS and firmware settings. See BIOS and Firmware.

Use this guide in conjunction with the latest *Autodesk Visual Effects and Finishing Installation and Configuration Guide*, to install and configure the hardware and software components of your Visual Effects and Finishing system.

**NOTE** In most cases, both hardware setup and application installation is done on delivery by an authorized technician, so you may not need to perform some of the procedures in these guides.

## Related Documentation

This release has documentation that helps you install, configure, and use the software. This documentation is available from the application DVD, on the Autodesk Web site, and is installed with the product (as PDF files and as an HTML help system).

For a list of all the documentation available to you, visit *http://www.autodesk.com/me-documentation*. From this page you can access the complete documentation library.

You should also refer to your product's release notes for all late-breaking release information.

# Notation Conventions

A number of style conventions are used throughout your documentation. These conventions and examples of their use are shown as follows.

| Convention | Example |
|---|---|
| Text that you enter in a command line or shell appears in Courier bold. Press the Enter key after each command. | **`install rpm -qa`** |
| Variable names appear in Courier, enclosed in angle brackets. | `<filename>` |
| Feedback from the command line or shell appears in Courier. | `limit coredumpsize` |
| Directory names, filenames, URLs, and command line utilities appear in italics. | */usr/discreet* |

# Contacting Customer Support

For Autodesk Media and Entertainment Customer Support, visit *http://www.autodesk.com/support*.

Customer support is also available through your Autodesk reseller. To find a reseller near you, consult the reseller look-up database at *http://www.autodesk.com/resellers*.

# Getting Started

# 2

**Topics in this chapter:**


- Workflow for Hardware Setup and Application Installation on page 3
- Hardware Configuration Guidelines on page 4
- BIOS and Firmware on page 7


## Workflow for Hardware Setup and Application Installation

The following procedure provides the general workflow for installing an Autodesk Visual Effects and Finishing application on a workstation.

**To install a Visual Effects and Finishing application on a workstation:**

1. Review the guidelines for working with hardware components. See Hardware Configuration Guidelines on page 4.
2. Connect all peripherals (mouse, keyboard, Wacom® tablet, graphics monitor) to the proper ports, and connect your workstation to the Autodesk® Wire® network. See Peripherals Connection Diagrams on page 13.
3. Connect your workstation to the storage. See Connecting Storage on page 35.
4. Connect a VTR and a broadcast monitor to your workstation. See Setting Up Video Hardware on page 17.
5. Set up the audio hardware. See Setting Up Audio Hardware on page 29.
6. Perform the procedures in the *Red Hat Enterprise Linux Workstation 4, Update 3 Installation and Configuration Guide* to install your operating system and the Discreet® Kernel Utility (DKU).
7. (Optional) If you need to reconfigure your media storage filesystem, see the *Autodesk Visual Effects and Finishing Installation and Configuration Guide* for information on setting up a standard filesystem (such

as XFS), or the last version of the *Autodesk Stone and Wire Filesystem and Networking Guide* for information on setting up the Stone® filesystem.

8 Perform the procedures in the *Autodesk Visual Effects and Finishing Installation and Configuration Guide* to install and license your Visual Effects and Finishing application.

# Hardware Configuration Guidelines

In most cases, hardware integration and application installation are done on delivery by an authorized technician, and some of the procedures in this guide may not be necessary. Still, it is a good idea to read through all chapters to familiarize yourself with the configuration procedures for the following reasons:

- Many suspected problems with your system may be due to loosened connections or improperly configured devices. This guide helps you troubleshoot problems by providing information about properly configured systems.
- If you need to call Customer Support, familiarity with this guide allows you to help Customer Support diagnose problems.
- If you want to move your system at any time, or upgrade certain hardware components, this guide contains crucial information.

This guide, in conjunction with the *Autodesk Stone Direct Configuration Guide*, provides complete information about the configuration of hardware components. However, hardware configuration should only be performed by an experienced hardware integrator.

Your Autodesk system consists of high-performance hardware that must be configured in an environment suited to its operational needs. The following sections discuss:

- Memory requirements
- Proper environmental conditions
- Power and air-conditioning
- Rack-mounting
- Static discharges
- Audio grounding

## Memory Requirements

The HP xw9400 supports up to 16 GB of memory, and uses DDR2-667 ECC Registered / Unbuffered DIMMs. The amount of memory required for your Autodesk Visual Effects and Finishing system depends on the resolution of your projects, the type of work you perform and, in some cases, the platform on which you are running the application. Refer to the *Autodesk Visual Effects and Finishing Software Installation Guide* to determine the memory requirements for your Visual Effects and Finishing application.

## Ensuring Proper Environmental Conditions

You should consider the following environmental guidelines for all hardware configuration:

- Place all components in an air-conditioned environment. All hardware components generate heat and must be kept cool. See Power and Air Conditioning Requirements on page 5.

- Make sure the rack on which hardware components are mounted is open or well ventilated. Follow the ventilation specifications that apply to your system. See Rack Mount Requirements on page 5.
- Keep all hardware components in a clean, dust-free location.
- Minimize vibration and humidity.
- Do not block the vents on the component housing.
- Do not drape anything, such as a jacket or a blanket, over hardware components.
- Minimize electromagnetic noise by separating digital data and power cables from analog audio cables and running them in different cable ducts.

## Power and Air Conditioning Requirements

The values for power consumption and heat output were recorded on an Autodesk certified system with all of the required peripherals and certified components.

**NOTE** These values can fluctuate if uncertified hardware components or third party applications are added to your system. The use of uncertified hardware components or third party applications is not supported. Please consult the manufacturer's documentation for standardized minimum and maximum values.

The following table summarizes the peak (at startup) power consumed by the HP xw9400 system and the heat it generates under the maximum processing load produced by your Visual Effects and Finishing application. For detailed specifications, including noise output, see the documentation provided by the manufacturer.

| Component | Quantity | Startup Amps (120V / 240V) | Max. Amps (120V / 240V) | Watts | Heat (BTUs) |
|---|---|---|---|---|---|
| HP xw9400 | 1 | 3.5 / 1.8 | 3.0 / 1.5 | 360 | 1228.68 |
| Miranda DVI-Ramp$^2$ | 1 | 0.5 / 0.3 | 0.5 / 0.3 | 50 | 170.65 |
| Lucid ADA 88192 | 1 | 0.5 / 0.3 | 0.5 / 0.3 | 45 | 153.58 |

**NOTE** Workstations equipped with the NVIDIA® Quadro® FX 5600 graphics board and the NVIDIA Quadro SDI board do not use the Miranda DVI-Ramp$^2$.

You must be able to meet the startup power requirement and have a climate control system with the capacity to maintain the temperature of these components under the maximum processing load. Refer to the following table for standard conversion benchmarks and an example of how they are used to establish climate control requirements.

| Unit Conversion | Example |
|---|---|
| 1 Watt = 3.413 BTU | 384 Watts = 1228.68 BTU |
| 12000 BTU = 1 Ton of air conditioning | 1228.68 BTU = 0.102 Ton of air conditioning |

## Rack Mount Requirements

You can rack mount your Visual Effects and Finishing system. Plan for sufficient space in your rack mount chassis to install the following components:

- An HP xw9400 system

- An AJA OEM-2K breakout box
- A Miranda DVI-Ramp$^2$, if your workstation uses one
- A Stone® Direct storage chassis (XR model)
- Additional Stone Direct expansion chassis (XE model), as required

The form factor units of these components are provided in the following table.

| Component | Quantity | Form Factor | Required Rack Space |
|---|---|---|---|
| HP xw9400 | 1 | 5U | 5U |
| AJA OEM-2K breakout box | 1 | 1U | 1U |
| Miranda DVI-Ramp$^2$ | 1 | 1U | 1U |
| Stone Direct storage chassis (XR) | 1 | 2U | 2U |
| Stone Direct expansion chassis (XE) (each) | 1 | 2U | 2U |

## Avoiding Damage from Static Electricity

When installing any hardware equipment, take the following precautions to prevent damage to sensitive components from static discharge:

- Make sure power is turned off on the component you are working on. It is a good idea to unplug components until all other connections are configured.
- Always wear a grounded static wrist strap. Attach the strap's alligator clip to any grounded metal surface on the component's chassis that you are working on. Place the wristband around your wrist.
- Do not handle any components unnecessarily, particularly boards and cards that slide in and out of PCI slots on their parent hardware components.

## Grounding Audio Hardware Components

It is important to properly ground your audio components. Otherwise, you may have ground loops, or humming in the system. To ensure audio components are properly grounded, use the XLR-3 cables shipped with your system. Using any other cables may cause humming in the system.

## Receiving Your Shipment

When you receive your shipment, check all the boxes for dents or other markings that may indicate damage during transport. If you suspect a component is damaged, carefully inspect it before setting up the system. If you receive a damaged component, call Customer Support.

Use the enclosed packing checklist to ensure that you received all of the parts.

# BIOS and Firmware

In most cases, hardware integration and application installation are done on delivery by an authorized technician, so you should not have to verify or upgrade the BIOS or the different firmwares. But, if you are upgrading your Visual Effects and Finishing application yourself, perform the following procedures.

**NOTE** Refer to your product's release notes for the latest system BIOS and firmware versions.

# System BIOS

System configuration is done prior to delivery by an authorized technician. The procedures in this section may not be necessary, and are provided here for informational purposes only.

### Updating Your System BIOS

The BIOS version installed on your system appears on the screen while booting the workstation. The following procedure describes how to update a workstation to the certified BIOS version required by your Autodesk Visual Effects and Finishing application.

**To update the BIOS on your workstation:**

1. Open a terminal, and log is as root.
2. Insert the application DVD in the drive of the workstation and mount it.
3. Go to the *DKU_*`<version_number>`*/Utils/BIOS* directory on the DVD,

   where `<version_number>` represents the version of the DKU. For example:

   **`cd /mnt/cdrom/DKU_4.0.0/Utils/BIOS`**

   **TIP** If the DKU has already been installed on the workstation, you can access its contents in the */usr/discreet/DKU* directory, without having to use the application DVD.

   Each platform supported by the version of your Visual Effects and Finishing application has its own directory that contains an *.iso* file.

   **NOTE** For more information about updating the BIOS on your workstation, refer to the README file also located in the platform's directory.

4. Type:

   **`cd <platform>`**

5. Burn the *.iso* file onto a CD and place it in the DVD-ROM drive of the workstation.
6. Reboot the workstation and press **F10** to enter BIOS.
7. Optional: Press **F8** to select a language.
8. Select File | Flash® System ROM.

   The Select a Drive dialog box appears.
9. Select CD-ROM, and press **F10** to confirm.
10. Select the *.bin* file.

    The Flash System ROM confirmation dialog box appears.
11. Press **F10** to confirm.

12 Press any key.

A message stating that the system ROM flash was successful appears.

13 Verify system BIOS settings. See Checking Your System BIOS Settings on page 8.

14 Select File | Save Changes and Exit.

### Checking Your System BIOS Settings

You do not normally need to adjust these settings. BIOS settings for the workstation are provided here for informational purposes only.

To enter the system BIOS, you must press **F10** while booting the workstation.

The following table lists the proper Autodesk certified BIOS settings. Items not listed are set to their default factory settings.

| BIOS Menu | Item | Value |
|---|---|---|
| Storage | Boot Order | Optical Drive |
| | | USB Device |
| | Boot Order, Hard Drive | Integrated SATA |
| | | Integrated IDE |
| Advanced | OS Power Management, ACPI S3 Support | Disabled |
| | Chipset / Memory, ECC Support | Enabled |
| | Chipset / Memory, Memory Scrubbing | Enable |
| | Chipset / Memory, Memory Node Interleave | Enable |
| | Chipset / Memory, PCI Serr# Generation | Enable |
| | Chipset / Memory, Net Watchdog Timer | Enable |
| | Chipset / Memory, ACPI Bus Segmentation | Disabled |
| | Chipset / Memory, HPET | Enabled |
| I/O | Device Options, S5 Wake on LAN | Disabled |

**WARNING** Before installing Red Hat® Linux®, validate the BIOS Settings.

### Restoring BIOS to Default Factory Settings

If there is any doubt about whether items contain factory default values, the following procedure restores default factory settings.

**To restore default factory BIOS settings:**

1 Press **F10** while booting the workstation to enter the system BIOS.

2 Select File | Default setup | Restore Factory Settings as Default.

3 Press **F10** to accept the changes.

4 Select Apply Defaults and Exit, then press **F10** to confirm.

The factory system defaults are restored.

# DVI-Ramp Firmware

**NOTE** Refer to this section only if your workstation uses a Miranda DVI-Ramp or Miranda DVI-Ramp$^2$. If your workstation is equipped with an NVIDIA Quadro FX 5600 graphics board and an NVIDIA Quadro SDI board, you do not need a DVI-Ramp or DVI-Ramp$^2$.

System configuration is done prior to delivery by an authorized technician. The following procedures may not be necessary, and are provided here for informational purposes only.

### Verifying DVI-Ramp and DVI-Ramp$^2$ Firmware

The firmware on your DVI-Ramp must correspond to the certified version required by your Visual Effects and Finishing application version. Each firmware is itself associated to a DVI-Ramp version and a hardware version. If the firmware on your DVI-Ramp does not match the hardware version listed in the table below, you must update the firmware to the certified version.

| Visual Effects and Finishing Application Version | | Hardware Version | Certified Firmware Version |
|---|---|---|---|
| 2009 with | DVI-Ramp | 3.20 | 3.70 |
| | DVI-Ramp | 4.20 | 4.71 |
| | DVI-Ramp$^2$ | 6.00 | 6.0506<br>6.0507<br>6.0508 |

The DVI-Ramp firmware update utilities required to check your firmware version and perform the update are included with the DKU version associated with the release of your Visual Effects and Finishing application. The following procedure describes how to verify the firmware version of the DVI-Ramp.

**To verify the firmware version of the DVI-Ramp:**

1. With the DVI-Ramp connected to your workstation and powered up, open a terminal, and log in as root.

   **WARNING** If your DVI-Ramp is connected to the HP workstation using a USB-to-Serial adapter, you must remove the adapter from the USB port, and connect the serial cable of the DVI-Ramp to the serial port of the workstation. This does not apply to DVI-Ramp$^2$ units.

2. Insert the application DVD in the DVD-ROM drive of the workstation and mount it.

3. Go to the *DKU_*`<version_number>`*/Utils/DVI_firmwareUpdate* directory on the DVD, where `<version_number>` is the DKU version. For example:

   **`cd /mnt/cdrom/DKU_3.0.0/Utils/DVI_firmwareUpdate`**

   **TIP** If the DKU has already been installed on the workstation, you can access its contents in the */usr/discreet/DKU* directory, without having to use the application DVD.

4. Run the *info* command to scan the DVI-Ramp's current firmware. Type:

   **`./info`**

   The output is similar to the following example:

```
Versions:
Hardware = <Hardware Version>
Micro = <Firmware version>
Genlock = 3.21
DVI = 4.01
FrameBuffer = 4.05
SDI = 4.10
```

Where `<Hardware Version>` is the current version of the DVI-Ramp hardware, and `<Firmware version>` is the firmware currently loaded in the DVI ramp. If the firmware version does not match the hardware version listed in the table that precedes this procedure, you must perform the firmware update procedure.

### Updating the DVI-Ramp Firmware

The firmware on your DVI-Ramp must correspond to the certified version required by your Visual Effects and Finishing application version. If you verified the firmware on your DVI-Ramp and it did not match the certified version, you must update it. The following procedure describes how to update the firmware version of the DVI-Ramp.

**To update the DVI-Ramp firmware:**

1. Open a terminal, log in as root, and go to the *DKU_*`<version_number>`*/Utils/DVI_firmwareUpdate* directory of the application DVD, where `<version_number>` represents the version of the DKU. For example:

   **`cd /mnt/cdrom/DKU_3.0.0/Utils/DVI_firmwareUpdate/`**

   **TIP** If the DKU has already been installed on the workstation, you can access its contents in the */usr/discreet/DKU* directory, without having to use the application DVD.

2. From the *DVI_firmwareUpdate* directory, launch the DVI-Ramp upgrade utility by typing:

   **`./updateDVI`**

   The script checks the hardware version of the DVI-Ramp and then installs the firmware update. The update should take between 5 and 10 minutes. You can monitor the progress of the firmware update in the terminal.

   The DVI-Ramp is rebooted several times during the firmware update. Any monitors connected directly to the DVI-Ramp (such as the graphics monitor and/or a broadcast monitor) flash each time the DVI-Ramp is rebooted. This is normal and indicates that the firmware is being updated.

3. Once the firmware update is complete, updated hardware information for your DVI-Ramp appears in the terminal.

4. If you had to remove the USB-to-Serial adapter, reconnect the serial cable to the adapter, then put the adapter back in the USB port. Restart the HP workstation.

## AJA OEM-2K PCI-X Firmware

System configuration is done prior to delivery by an authorized technician. The following procedures may not be necessary, and are provided here for informational purposes only.

### Verifying the AJA OEM-2K PCI-X Firmware

The firmware on your AJA OEM-2K PCI-X (AJA PCI-X) must correspond to the certified version required by your Visual Effects and Finishing application version. Refer to your product's release notes for the latest AJA OEM-2K PCI-X firmware versions.

The AJA PCI-X firmware update utilities required to check your firmware version are included with the DKU version associated with the release of your Visual Effects and Finishing application. The following procedure describes how to verify the firmware version of the AJA PCI-X.

**To verify the AJA PCI-X firmware version:**

➤ Open a terminal, and type:

**`cat /proc/driver/aja`**

An output similar to the following should appear:

```
AJA Driver Name: oem2k
Version: 4.1 Beta 11
Card #: 0
Board Version String: OEM 2K - Rev 0
PCI Version: 0x55
Board ID: 10196500
FPGA built on 2007/09/18 at 10:57:41
```

**NOTE** If there is no *aja* file in /proc/driver, you are using an outdated driver or the driver is not loaded and you must install the latest DKU for your workstation. Refer to the *Autodesk Visual Effects and Finishing Software Installation Guide*.

### Updating the AJA PCI-X Firmware

The firmware on your AJA PCI-X must correspond to the certified version required by your Visual Effects and Finishing application version. If you verified the firmware on your AJA PCI-X and it did not match the certified version, you must update it. The following procedure describes how to update the firmware of the AJA PCI-X to the certified version required by your Visual Effects and Finishing application.

**To update AJA PCI-X firmware:**

1. Log in as root and open a terminal.
2. Insert the application DVD in the DVD-ROM drive of the workstation, and mount it.
3. Go to the *DKU_*`<version_number>`*/Utils/AJA_firmwareUpdate* directory of the DVD, where `<version_number>` represents the version of the DKU. For example:

   **`cd /mnt/cdrom/DKU_3.0.0/Utils/AJA_firmwareUpdate`**

   **TIP** If the DKU has already been installed on the workstation, you can access its contents in the */usr/discreet/DKU* directory, without having to use the application DVD.

4. Run the *AJAfw_update* utility to scan the AJA current firmware and, if required, update to the latest firmware version. Type:

   **`./AJAfw_update`**

   The script checks the firmware of your AJA board, and one of the following events occurs:

   - The script detects that the firmware and drivers need to be updated and prompts you to start the update. In this case, continue to the next step of this procedure.

- The script indicates that the firmware is up-to-date and exits. In this case, you are finished; go to step 6 of this procedure to eject the DVD.

---

**NOTE** For more details about the AJA firmware procedures, consult the *README* file located in the current directory.

---

5 Start the firmware update by typing **Y** and then pressing **Enter**.

While the AJA board's firmware and drivers are being updated, your workstation appears to be frozen and your mouse and keyboard do not work. This is normal and indicates that the firmware is being updated. Once the firmware update is complete, you are returned to the terminal.

6 When you are returned to the terminal, return to the root directory and eject the DVD by typing:

```
cd /
eject /mnt/cdrom
```

7 Shut down your workstation by typing:

```
shutdown -g0
```

If your workstation does not prompt you to power down, press the power button for 10 seconds to force a power down.

8 Disconnect the power cord.

9 Wait 10 seconds, reconnect the power cord, then restart your workstation.

# Connecting Peripherals

# 3

**Topics in this chapter:**


- Peripherals Connection Diagrams on page 13
- Connecting the Keyboard, Mouse, and Tablet on page 15
- Network Connections on page 16


## Peripherals Connection Diagrams

Before you boot your workstation, connect all hardware peripheral devices as illustrated in this chapter. For storage connection diagrams, see Connecting Storage on page 35.

The following two diagrams identify the ports to which the peripherals connect on the HP xw9400 workstation:

- The first diagram illustrates the peripherals setup for an HP xw9400 workstation equipped with a NVIDIA® Quadro® FX 5500G graphics board and a DVI-Ramp.
- The second diagram illustrates the peripherals setup for an HP xw9400 workstation equipped with a NVIDIA Quadro FX 5600 graphics board and an NVIDIA Quadro SDI board.

---

**NOTE** All the diagrams in this document illustrate a Gigabit Ethernet (GigE) adapter located in PCI slot four. Your workstation may also be configured with an optional QuickSilver InfiniSERV 9000 PCIe-DDR adapter that replaces the GigE adapter. On the HP xw9400 workstation, the PCI slots are numbered one to seven from top to bottom.

---

For detailed information on video connections, refer to Setting Up Video Hardware on page 17.

For detailed information on audio connections, refer to Setting Up Audio Hardware on page 29.

## HP xw9400 Workstation with DVI-Ramp

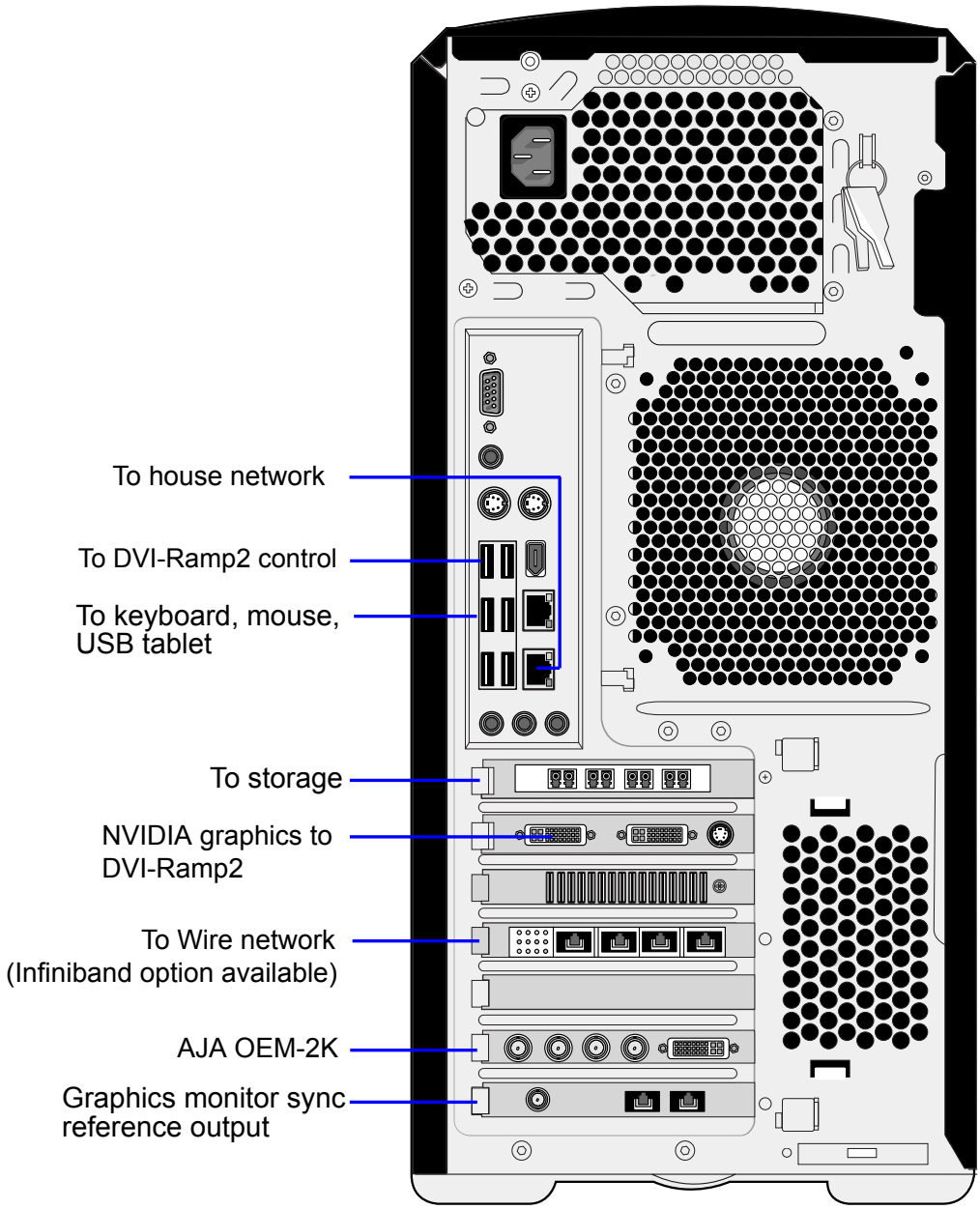

## HP xw9400 Workstation with NVIDIA Quadro SDI

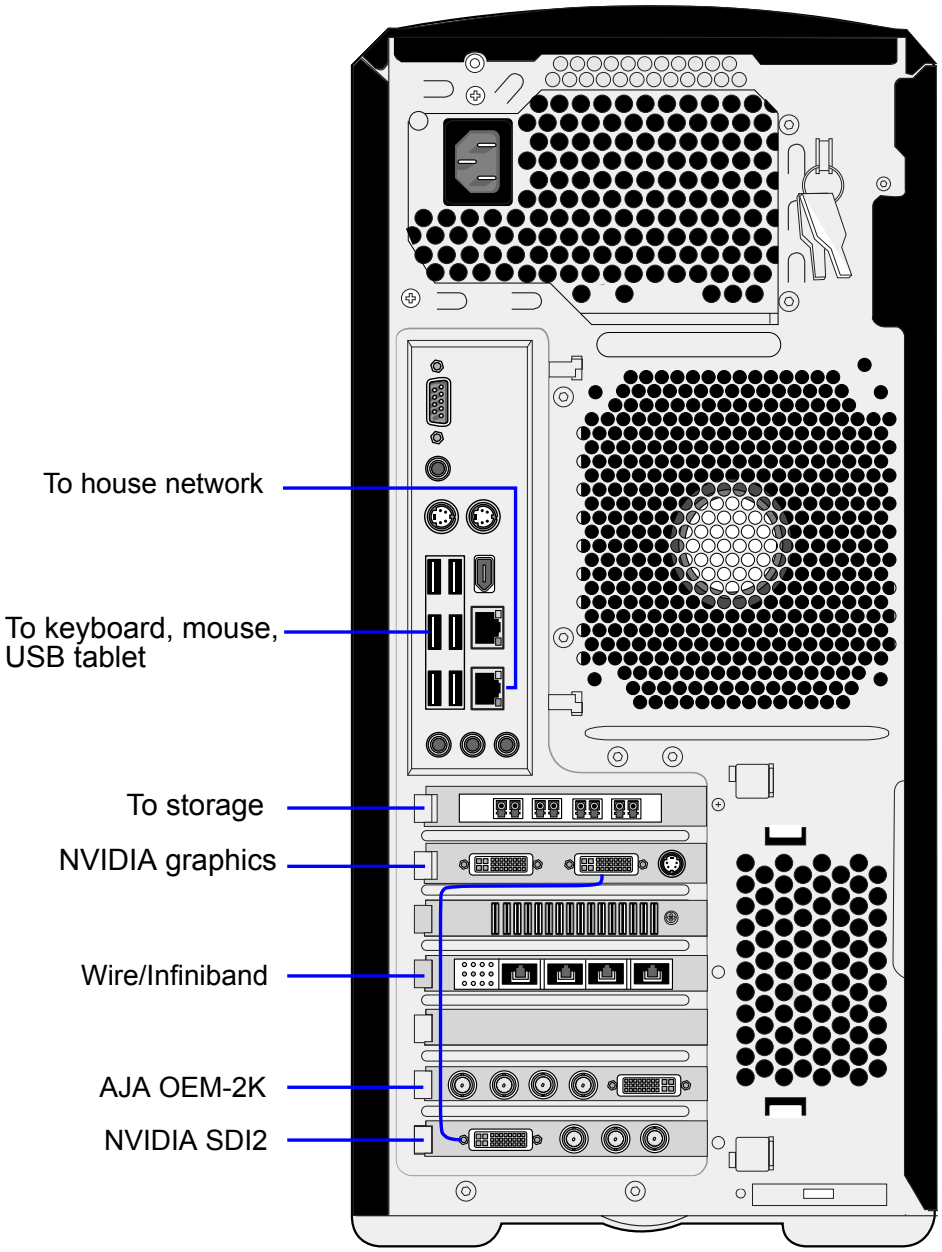


# Connecting the Keyboard, Mouse, and Tablet

Connect the keyboard, mouse, and tablet to the USB extender and the workstation *before* booting the workstation and before installing the application.

The Wacom® Intuos USB tablet is shipped with your system. All customization with respect to the tablet, including setting tablet margins, should be done in the Preferences menu of your application. For help, see the description of Pointer preferences in your application User Guide.

# Network Connections

Consult the Peripherals Connection Diagrams on page 13 as a reference for network interface card (NIC) locations.

## Connecting to Gigabit Ethernet (GigE) Networks

You must use the correct Gigabit Ethernet network card to connect your workstation to the Wire network. Otherwise, you may degrade the performance of your Wire network.

Do the following to maximize Wire network performance in your facility:

- Connect ports from the add-on network card to the switch used for your Wire network.
- Connect the house network to the on-board network port shown in the Peripherals Connection Diagrams on page 13. Do not use any of the ports on the add-on network card for your house network. If the house network is not connected to the on-board network port, consult your system administrator to reconfigure it.
- Use high-quality Category 6 (Cat 6) network cables when connecting the workstation to your Wire network switch.

## Connecting to the Infiniband (IB) Network

Your workstation may be configured with an optional QuickSilver InfiniSERV 9000 PCIe-DDR series IB adapter. The IB network adapter resides in PCI slot four. Consult the Peripherals Connection Diagrams on page 13 as a reference for the optional IB network adapter location.

You must use the correct port on the IB network adapter to connect your workstation to the IB Network.

**To connect the workstation to IB network:**

➤ Connect port 1 of the IB network adapter to the IB network. On the HP xw9400 workstation Port 1 is the port on the right. For information on how to configure the IB adapter, refer to the *Autodesk Stone and Wire Filesystem and Networking Guide*.

# Setting Up Video Hardware

# 4

**Topics in this chapter:**


- Video I/O Setup on page 17
- Standard VTR Control Cable Pinout on page 23
- Setting Up VTR Emulation on page 23


## Video I/O Setup

Use the information and wiring diagrams in this section to connect the video I/O components and a broadcast monitor to the HP xw9400 workstation.

Depending on the video preview device the workstation is equipped with, and on whether the Real-Time Deliverables (RTD) feature will be used or not, there are three possible video I/O configurations for your workstation:

- For workstations equipped with a Miranda DVI-Ramp2 as a video preview device, see Video I/O Setup for Workstations Using a DVI-Ramp2 on page 18.
- For workstations equipped with a NVIDIA Quadro SDI board as a video preview device, without support for Real-Time Deliverables, see the first wiring diagram in Video I/O Setup for Workstations Using the NVIDIA Quadro SDI Board on page 20.
- For workstations equipped with a NVIDIA Quadro SDI board as a video preview device, and with support for Real-Time Deliverables, see the second wiring diagram in Video I/O Setup for Workstations Using the NVIDIA Quadro SDI Board on page 20.

This section also lists the video components that are included with your shipment. The only video hardware you must provide are a sync generator, a VTR, a patch panel, if necessary, and an HD/SDI broadcast monitor.

**NOTE** Do not use an SD (NTSC or PAL) sync generator for HD projects. Always use a tri-level sync generator for HD projects. Using the wrong sync generator for a project may impact the stability of your workstation.

## Video I/O Setup for Workstations Using a DVI-Ramp2

The following video components are included with your shipment if your workstation uses a NVIDIA Quadro FX 5500 graphics board and a DVI-Ramp2.

**NVIDIA Quadro FX 5500G graphics board** The NVIDIA Quadro FX 5500G graphics board provides output to your computer monitor and to the broadcast monitor via the Miranda DVI-Ramp2.

**Miranda DVI-Ramp2** The DVI-Ramp2 connects the workstation to two display devices: a high-resolution computer monitor and a broadcast monitor. This allows the application user interface to be displayed on a high-resolution computer monitor, while the video content (preview window) is extracted and output to a broadcast video monitor. The DVI-Ramp2 can output either a standard definition serial digital video signal or a high definition serial digital video signal.

**AJA OEM-2K board and breakout box** The AJA OEM-2K board provides video I/O, audio, and VTR control. The AJA breakout box connects to the AJA OEM-2K board and handles SD (NTSC, PAL), and HD at a depth of 8 and 10 bits.

---

**NOTE** The VTR connects to the SDI In A and SDI Out A ports of the AJA breakout box. You can use the SDI In B and SDI Out B ports for dual link video I/O. VTR control is provided through the RS-422 port on the AJA breakout box.

---

**LCD graphics monitor** The LCD graphics monitor features a wide screen with a 16:9 aspect ratio, and a maximum resolution of 1920x1200.

**Altinex DA1804NT video distribution amplifier** The Altinex® video distribution amplifier can serve up to four video hardware devices from a single sync source/generator. It serves the sync signal to the NVIDIA graphics board, the AJA OEM-2K board, and the Miranda DVI-Ramp2.

Use the following diagram to connect the video I/O components to an HP xw9400 workstation equipped with a Miranda DVI-Ramp2.

---

**WARNING** It is critical to connect the sync source to the Altinex distribution amplifier exactly as shown in the diagrams to ensure the sync works correctly.

---

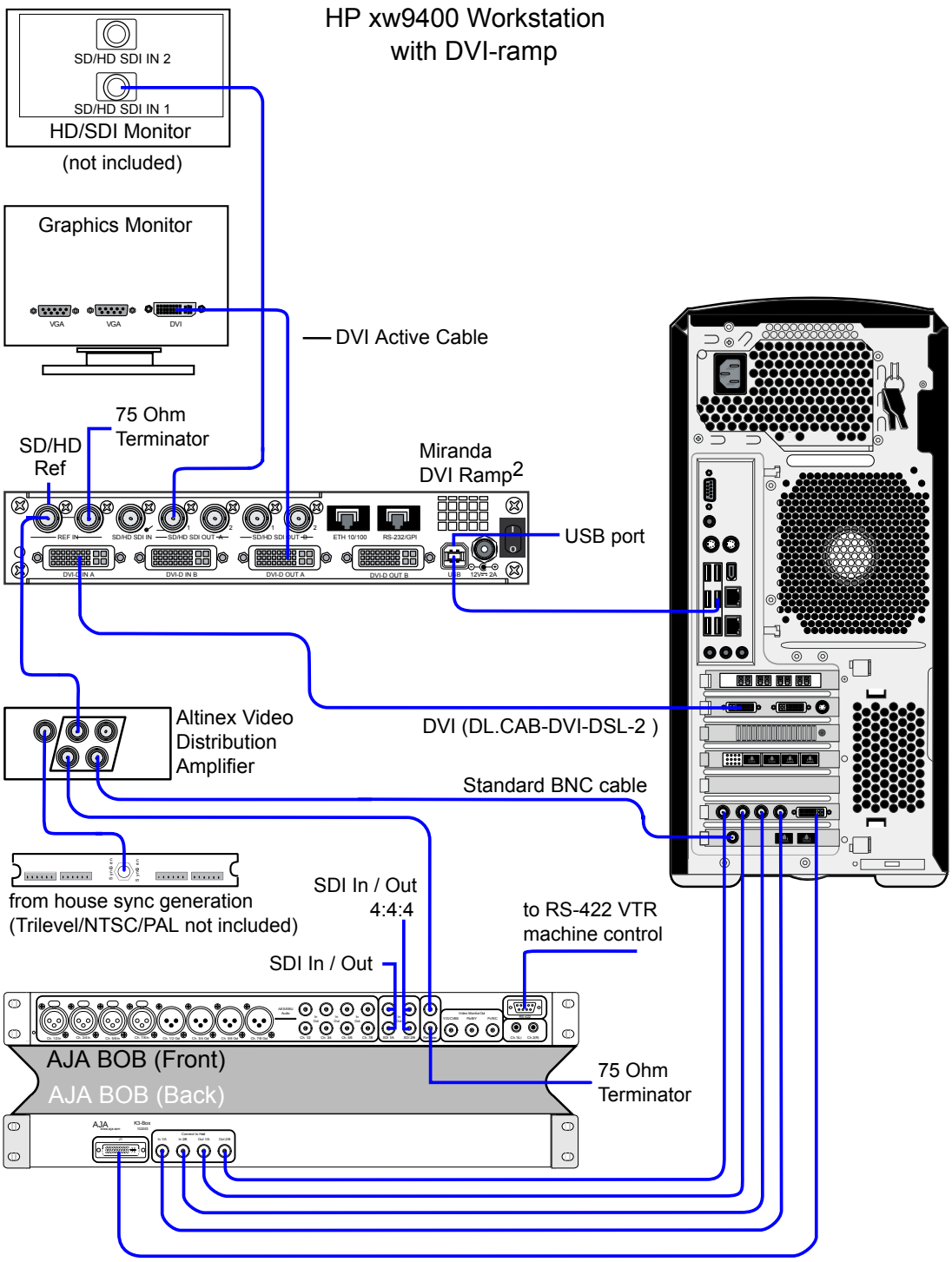
HP xw9400 Workstation
with DVI-ramp
SD/HD SDI IN 2
SD/HD SDI IN 1
HD/SDI Monitor
(not included)
Graphics Monitor
VGA
VGA
DVI
DVI Active Cable
75 Ohm
Terminator
SD/HD
Ref
Miranda
DVI Ramp2
USB port
Altinex Video
Distribution
Amplifier
DVI (DL.CAB-DVI-DSL-2 )
Standard BNC cable
from house sync generation
(Trilevel/NTSC/PAL not included)
SDI In / Out
4:4:4
to RS-422 VTR
machine control
SDI In / Out
AJA BOB (Front)
AJA BOB (Back)
75 Ohm
Terminator

## Video I/O Setup for Workstations Using the NVIDIA Quadro SDI Board

The following video components are included with your shipment if your workstation uses a NVIDIA Quadro FX 5600 graphics board and a NVIDIA Quadro SDI board.

**NVIDIA Quadro FX 5600 graphics board** The NVIDIA Quadro FX 5600 graphics board provides output to your computer monitor directly, and to the broadcast monitor via the NVIDIA Quadro SDI board.

**NVIDIA Quadro SDI board** The NVIDIA Quadro SDI board provides 2K, HD, or SD video output to a broadcast monitor, VTR, or SDI projector. The board features a BNC genlock connector that connects to your sync generator.

**AJA OEM-2K board and breakout box** The AJA OEM-2K board provides video I/O, audio, and VTR control. The AJA breakout box connects to the AJA OEM-2K board and handles SD (NTSC, PAL), and HD at a depth of 8 and 10 bits.

**LCD graphics monitor** The LCD graphics monitor features a wide screen with a 16:9 aspect ratio, and a maximum resolution of 1920x1200.

**AJA HD10DA Distribution Amplifier** The AJA distribution amplifier receives its signal from the NVIDIA SDI board and provides output to a VTR and broadcast monitor. The distribution amplifier is necessary in order to use the Real-Time Deliverables feature.

Refer to the following diagrams to connect the video I/O components to an HP xw9400 workstation equipped with a NVIDIA Quadro SDI board.

Note the following about the wiring diagrams:

- The output port and, if Real-Time Deliverables are not used, input port of the VTR connect to the SDI In A and SDI Out A ports of the AJA breakout box. You can use the SDI In B and SDI Out B ports for dual link video I/O.
- For Real-Time Deliverables, input port A of the VTR connects to the AJA HD10DA distribution amplifier (for 4:2:2 signal), and input port B connects to the appropriate connector on the NVIDIA SDI board (for dual link 4:4:4 signal).
- VTR control is provided through the RS-422 port on the AJA breakout box. See Standard VTR Control Cable Pinout on page 23.

---

**WARNING** It is critical to connect the sync source to the appropriate connector on the SDI board, exactly as shown in the diagrams.

---

HP xw9400 with NVIDIA SDI, without RTD support

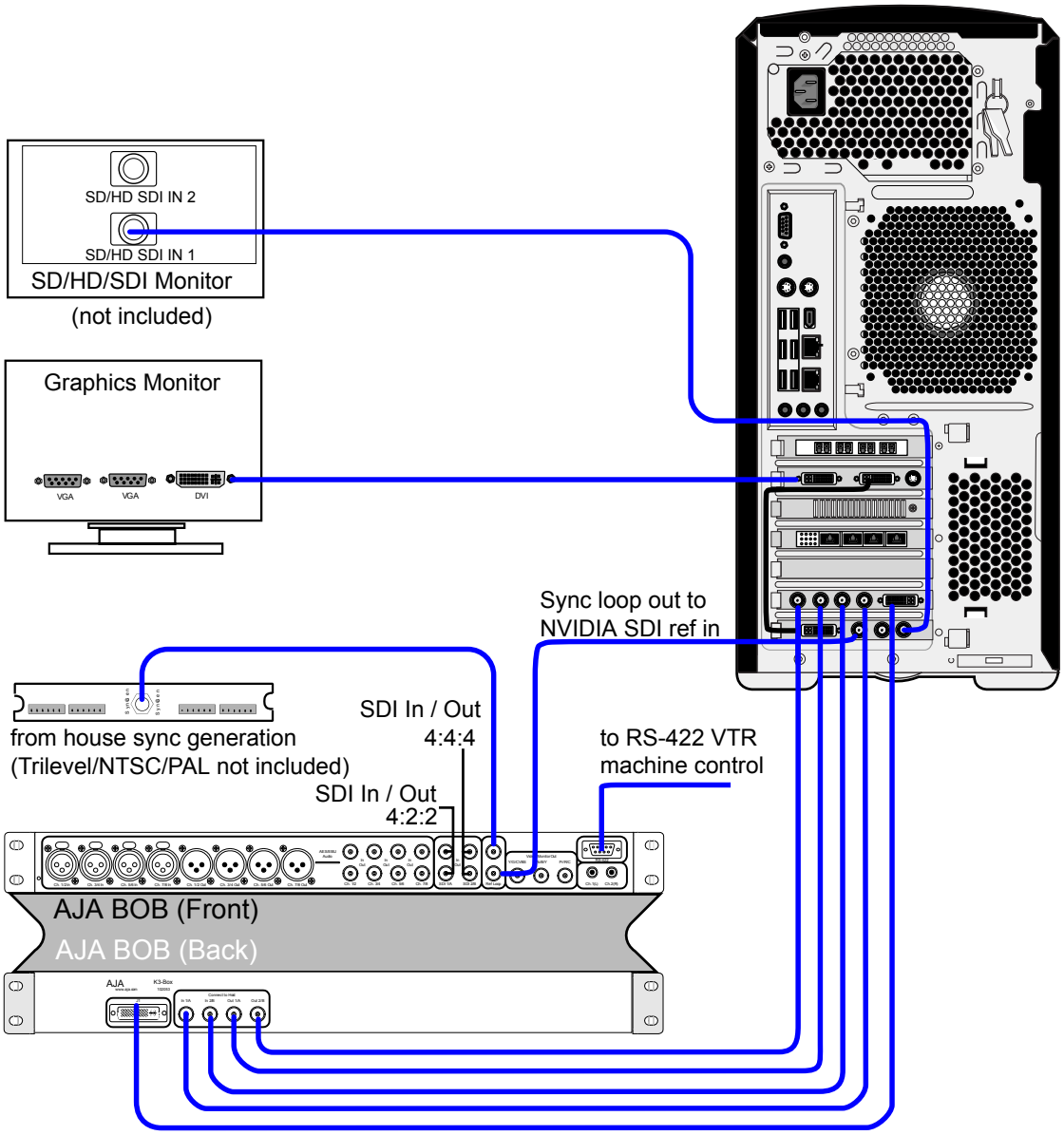

HP xw9400 with NVIDIA Quadro SDI, for RTD

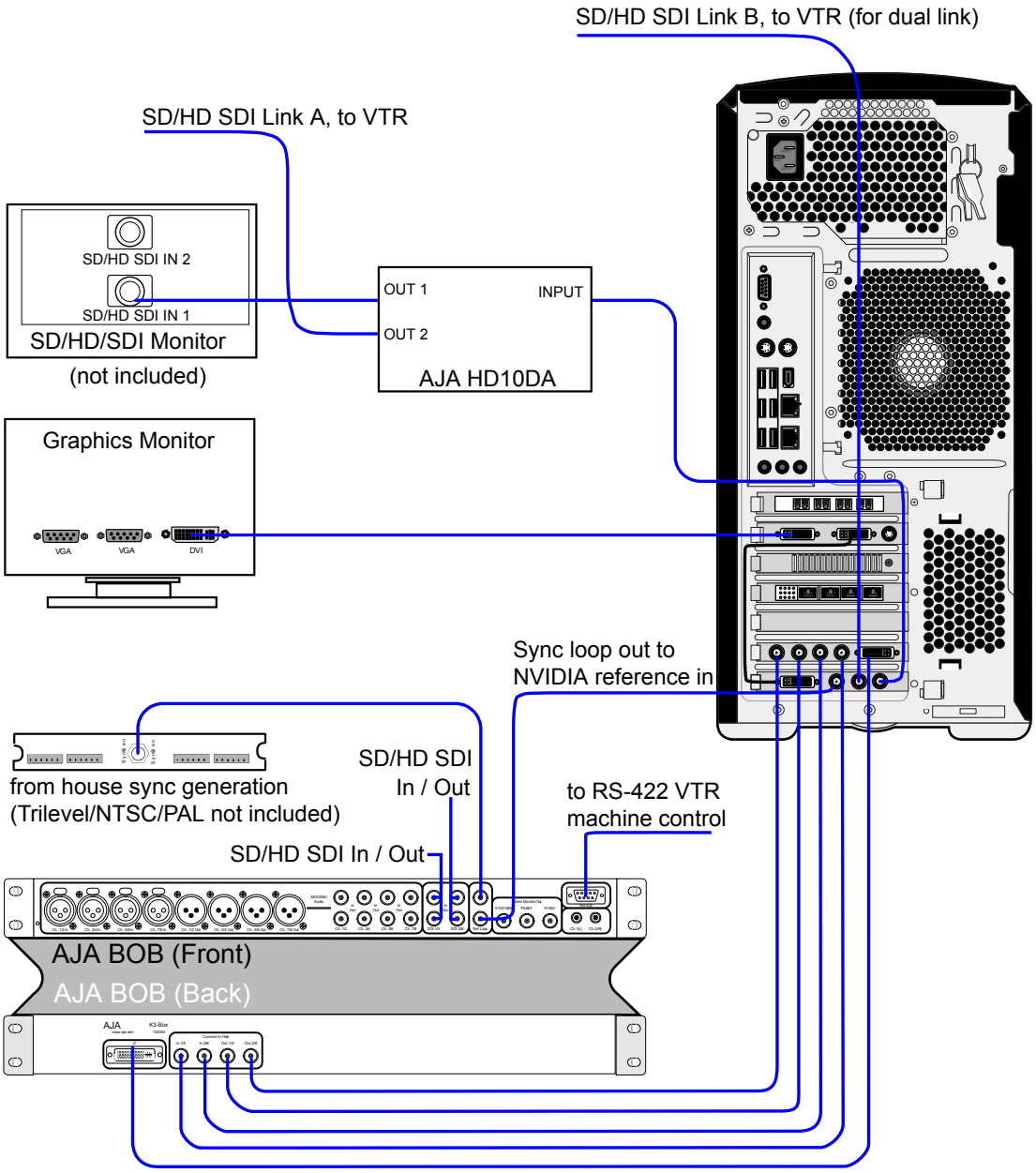

# Standard VTR Control Cable Pinout

The following diagram depicts the RS-422 control cable pinouts for the standard VTR control cable.

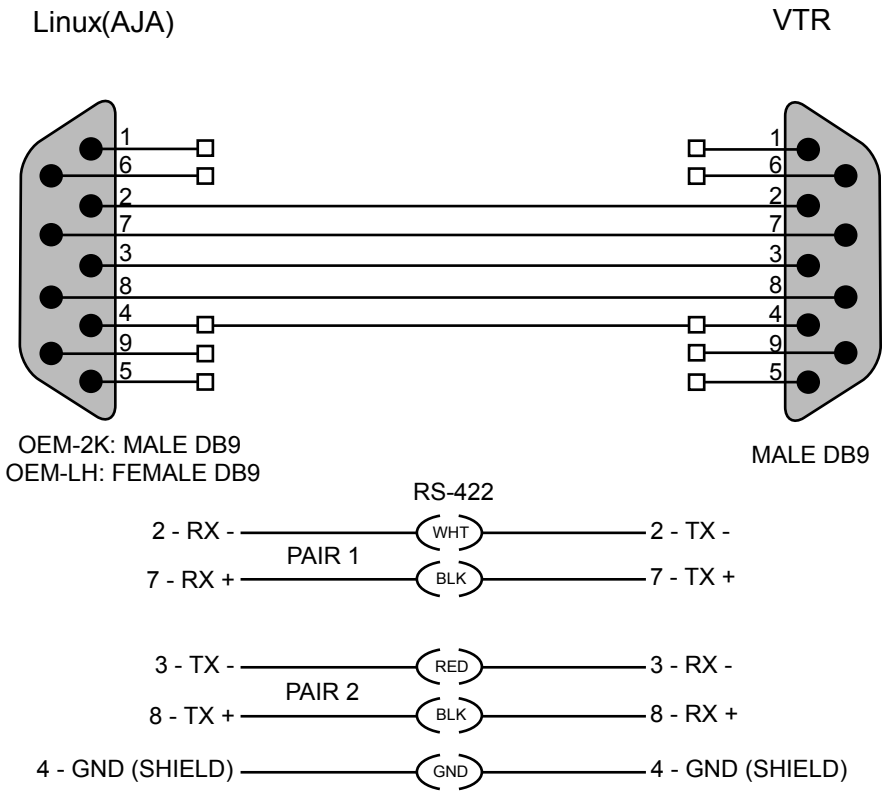


# Setting Up VTR Emulation

You can configure your Finishing application to emulate a VTR for both input and output in real time. You control the emulator from the application or device that sees the Finishing application as a VTR.

The following procedure describes how to configure the hardware for VTR emulation. Consult the *"VTR Emulation"* chapter in your application User Guide for more information.

**To configure hardware for VTR emulation:**

1 Connect the video I/O cables between the devices involved in the VTR emulation process (out-to-in/in-to-out). Make sure the connections support the video standard you want to work with.

   If you intend to use the emulator as a Player, it is recommended that you connect one black or colour bar SDI signal to the input of the system serving as the VTR emulator. This ensures the Player is stable and correctly synced.

**NOTE** VTR emulation requires a workstation with a video board. The Video keyword for the corresponding device must be uncommented in the software initialisation configuration file, *init.cfg*. See the description of the Video keyword in the *Autodesk Visual Effects and Finishing Configuration File Reference Guide*.

2 Connect the audio I/O cables between the devices involved in the VTR emulation process (out-to-in/in-to-out).

If you intend to use the emulator as a Player, it is recommended that you connect an external AES signal such as a tone to the input of the system serving as the VTR emulator. This ensures the Player is stable and correctly synced.

**NOTE** Connect an RS-422 control cable to the serial ports between the devices used in the VTR emulation process. Make sure the serial ports correspond to those defined by the Emulator keywords in the software initialisation configuration file. See the description of the Emulator keyword in the *Autodesk Visual Effects and Finishing Configuration File Reference Guide*.

**NOTE** The RS-422 cables for VTR emulation require custom pinouts. See VTR Emulation RS-422 Control Cables on page 24.

3 Make sure the appropriate video and audio sync setup is in place.

## VTR Emulation RS-422 Control Cables

Custom cables are required to control the VTR emulator. The pinouts required by the cable depend on the workstation and device involved in the VTR emulation process. The following diagrams depict the control cable pinouts required for the most common VTR emulation setups.

## VTR-Emulation Control Cable

Linux(AJA) Master Controlling Linux(AJA) Emulator

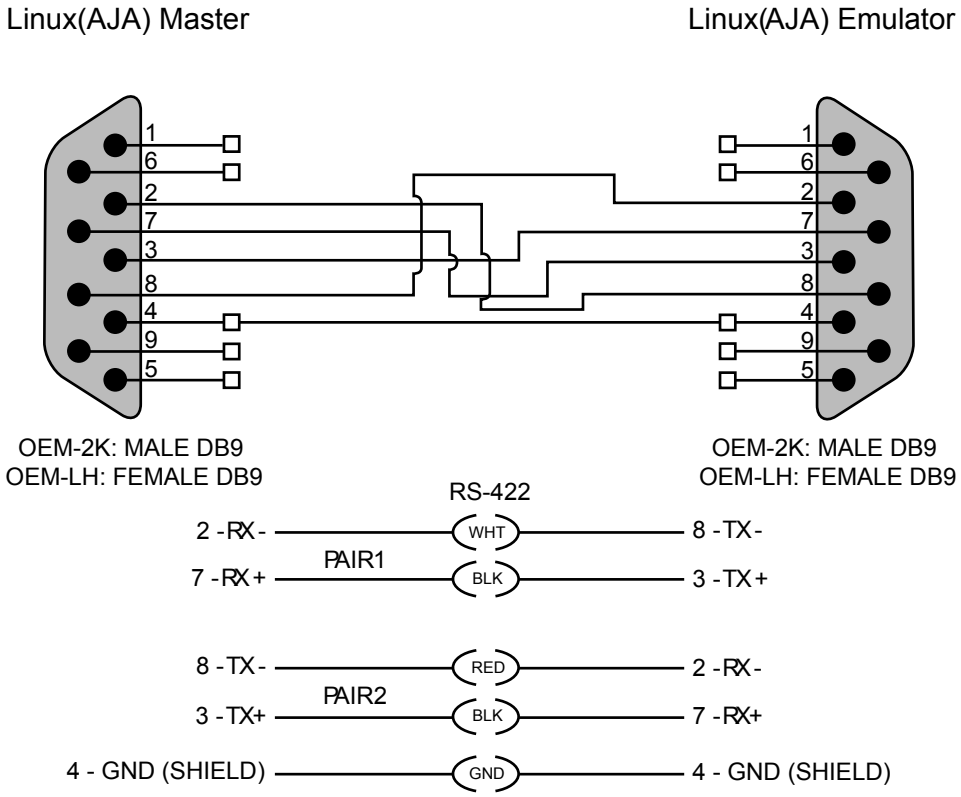

## VTR-Emulation Control Cable:

SGI® to/from Linux(AJA) — one master, one emulator

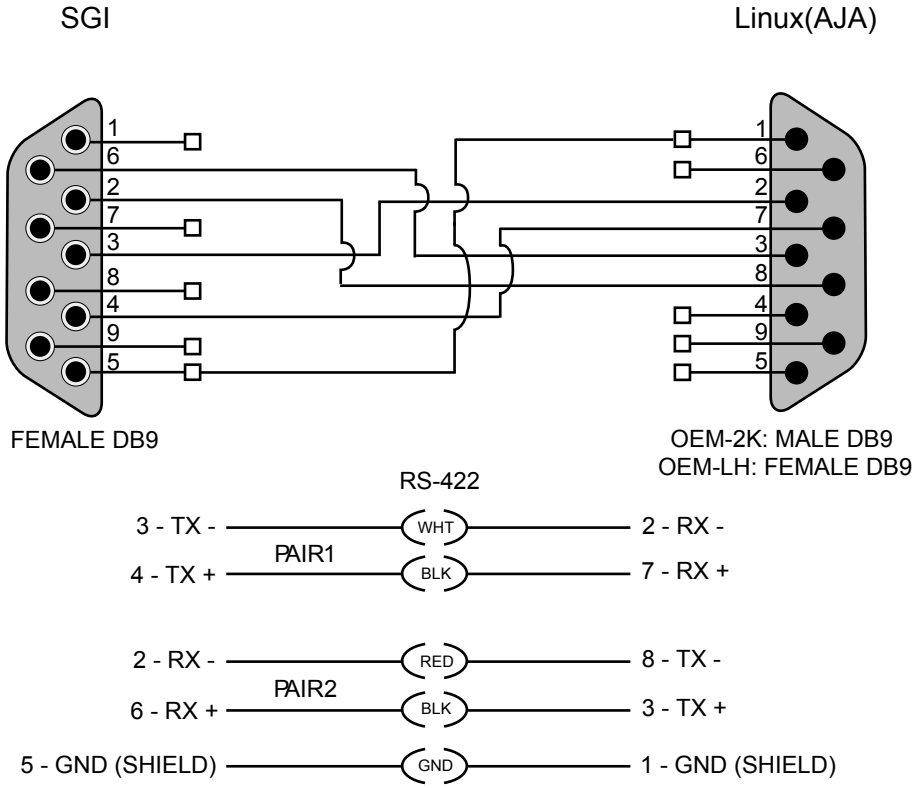

## VTR-Emulation Control Cable:
3rd-Party Device Master Controlling Linux (AJA) Emulator

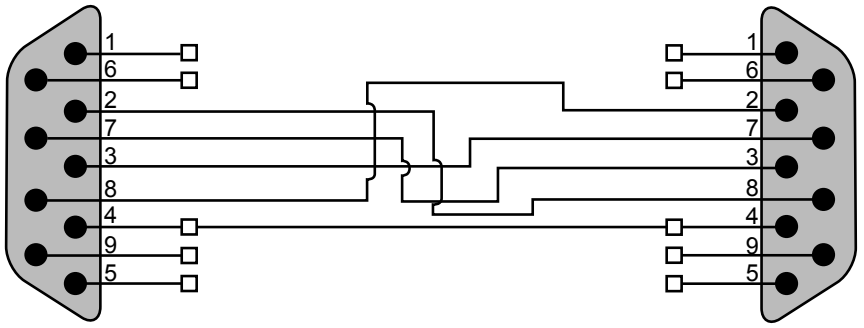


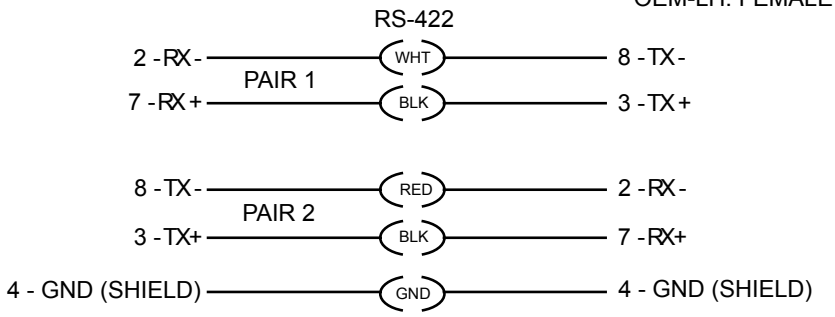

# Setting Up Audio Hardware

# 5

**Topics in this chapter:**


- About Audio on page 29
- Audio Wiring Workflow on page 29
- Audio Hardware Components on page 30
- Understanding Remote vs. Local Control of the Lucid Converter on page 30
- Audio Wiring on page 30
- Configuring the Lucid ADA 88192 Converter on page 31
- Audio Keywords in the Software Initialisation Configuration File on page 33


## About Audio

Your application uses the Discreet® Native Audio subsystem.

## Audio Wiring Workflow

The following procedure provides the general workflow for setting up the audio subsystem of your Visual Effects and Finishing application.

**To wire the audio subsystem:**

1. Ensure that all of your workstation peripherals and video hardware components are properly connected. If necessary, refer to Connecting Peripherals on page 13 and Setting Up Video Hardware on page 17.
2. Verify that you have all the required audio hardware components. See Audio Hardware Components on page 30.

3. Determine whether you want to control the Lucid converter remotely or locally. This affects the way you wire the audio hardware. See Understanding Remote vs. Local Control of the Lucid Converter on page 30.
4. Connect your audio hardware devices. See Audio Wiring on page 30.
5. Configure the Lucid converter for remote or local control. See Configuring the Lucid ADA 88192 Converter on page 31.
6. Set the appropriate keywords in the software initialisation file. See Audio Keywords in the Software Initialisation Configuration File on page 33.

# Audio Hardware Components

Discreet Native Audio uses the following hardware components, shipped with your system.

**Lucid Converter ADA 88192** Converts signals between the workstation and all digital or analog audio I/O devices.

**AJA Balanced Audio breakout box and AJA OEM-2K board** The Balanced Audio breakout box is the audio component of the AJA breakout box. It provides connections for audio I/O. This breakout box connects to the AJA OEM-2K board on your workstation. The OEM-2K board provides real-time input and output of uncompressed SD and HD video signals as well as audio data at 24-bit resolution. The OEM-2K board handles balanced AES/EBU audio signals from the Balanced Audio breakout box.

# Understanding Remote vs. Local Control of the Lucid Converter

You can control the converter either remotely or locally. Remote control of the converter means that you adjust converter settings through the audio preferences of the application. If you want to control the converter remotely, you must connect the converter to the serial port of the HP xw9400 workstation. Local control means you adjust converter settings manually, using the controls on the front of the converter. Controlling the converter remotely is the recommended method as it does not require physical access to the converter to change settings.

Whether you control the converter remotely or locally, you should take any necessary precautions to prevent inadvertent adjustments to settings via the controls on the front of the converter. For example, if the converter is one of several in a machine room, you might label each with the name of the computer to which it is connected, along with whether control is local or remote.

# Audio Wiring

To connect the Discreet Native Audio hardware components to the AJA breakout box, refer to the following diagram.

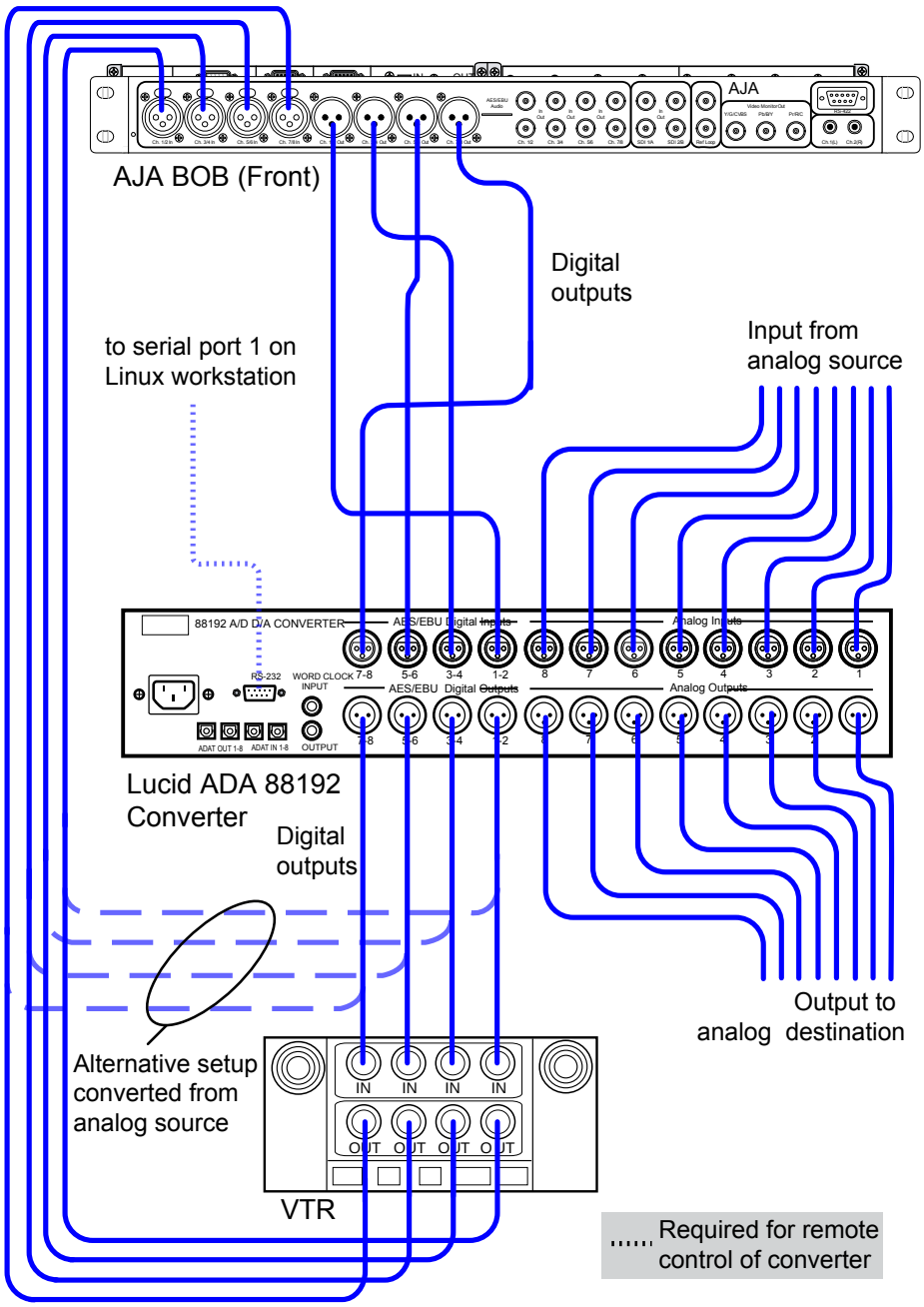


# Configuring the Lucid ADA 88192 Converter

You must manually configure the Lucid converter for either remote or local control. This section describes how to use the controls on the front of the converter to adjust settings, and lists the proper settings for remote control and for local control.

## Adjusting Lucid ADA 88192 Converter Settings

You configure the converter through a series of setup menus that appear in the display on the front of the converter. Use the encoder dial and button immediately to the right of the display to navigate these menus and adjust settings.

The top level setup menu contains the following menu items: ADAT, AES, Analog, Meter, Route, Sync, and System. Each of these menu items takes you into a submenu, from which you can select and adjust settings.

The procedures below provide basic information on navigating and adjusting settings. If you require additional information, refer to the Lucid ADA 88192 manual included with your shipment.

**To navigate menus and adjust settings:**

➤ Use the encoder dial and the button as follows.

| To: | Do this: |
|---|---|
| Select a menu option | Rotate the dial to highlight the option, then press the dial to select that option. If the option you select has choices (as, for example, in the Route menu), rotate the dial again to move through the choices, and press the dial to select an option. |
| Back up one level in the menu tree | Press the button. |
| Navigate to the top level setup menu | Press the button. Repeat until you are in the top level setup menu. |

**To reset all settings to their factory defaults:**

1. In the top level setup menu, select System, then select Miscellany.
2. In the Miscellany menu, select Defaults: RESET.
   All settings are reset to their factory defaults.

**NOTE** The factory default for the items in the AES setup menu is SRC ON. Both local and remote control require these items to be set to SRC OFF. If you reset to defaults, be sure to manually set these items back to OFF (you cannot adjust these settings remotely).

## Lucid ADA 88192 Converter Settings for Remote Control

You must configure the following settings to control the converter remotely. Any setting not listed here either has no effect with the application or can be set through the audio preferences of the application.

| Menu | Menu Item | Comment |
|---|---|---|
| ADAT | ADAT INs: SRC ONADAT INs: SMUX OFF | |
| AES | AES IN1+2: SRC OFFAES IN3+4: SRC OFFAES IN5+6: SRC OFFAES IN7+8: SRC OFF | |
| AnalogAnalog INs: SoftClip | IN1+2: SoftClip OFFIN3+4: SoftClip OFFIN5+6: SoftClip OFFIN7+8: SoftClip OFF | |

| Menu | Menu Item | Comment |
|---|---|---|
| Meter | Clip Detect: 3 | 3 is the recommended setting |
| SystemMiscellany | Route Unit: 8 | 8 is the recommended setting |

## Lucid ADA 88192 Converter Settings for Local Control

You must configure the following settings to control the converter locally. Any setting not listed here either has no effect with the application or can be set to any of the values available for it.

| Menu | Menu Item | Comment |
|---|---|---|
| ADAT | ADAT INs: SRC ONADAT INs: SMUX OFF | |
| AES | AES IN1+2: SRC OFF<br>AES IN3+4: SRC OFF<br>AES IN5+6: SRC OFF<br>AES IN7+8: SRC OFF | |
| Analog<br>Analog INs: SoftClip | IN1+2: SoftClip ON<br>IN3+4: SoftClip ON<br>IN5+6: SoftClip ON<br>IN7+8: SoftClip ON | |
| Analog<br>Analog INs: Gain | set each input channel to a value in the range -95.5 to +31.5 dB | |
| Analog<br>Analog OUTs: Level | set either -10 or +4 for each output channel | |
| Meter | Clip Detect: 3 | 3 is the recommended setting |
| Route | For analog audio:<br>AES INs --> ADAT OUTs<br>Analog INs --> AES OUTs<br>AES INs --> Analog OUTs | If these options do not appear, verify that Route Unit (in the System, Miscellany menu) is set to 8. |
| | For digital audio:<br>AES INs --> ADAT OUTs<br>AES INs --> AES OUTs<br>AES INs --> ANALOG OUT | |
| Sync | Internal OFF<br>External AES 1+2 | External AES 1+2 is the recommended setting. |
| System<br>Miscellany | Route Unit: 8 | |

## Audio Keywords in the Software Initialisation Configuration File

There are two keywords in the software initialisation file (by default, *init.cfg*) that must be uncommented and set to the correct values to ensure Discreet Native Audio works properly. The first, Audiodevice, enables

Discreet Native Audio. The second, MidiDevice, determines whether control of the Lucid converter is remote or local.

| Keyword: | Setting: |
|---|---|
| Audiodevice | AJA |
| MidiDevice | If you are using local control of the converter, comment out this keyword.<br>If you are using remote control of the converter, uncomment the keyword, set the serial port parameter to /dev/ttyS1 and leave all other parameters set to their default value. |

For additional information on these keywords and help setting them, see the *Autodesk Visual Effects and Finishing Configuration File Reference Guide*.

# Connecting Storage

# 6

**Topics in this chapter:**


- Connecting Media Storage on page 35
- Connecting Archiving Storage on page 43


## Connecting Media Storage

### Overview

The workstation can be connected to two types of media storage.

- **Stone Direct XR-series disk arrays** Autodesk's high-performance direct-attached storage (DAS) solution designed to address the different real-time playback requirements of various workflows. Direct attached storage devices provide storage to individual workstations, and can be made available to other Autodesk Visual Effects and Finishing workstations via the Autodesk Wire network.

  **NOTE** A Lustre workstation equipped with Incinerator does not use DAS storage. Incinerator storage is attached to the Lustre Media Server, accessed by way of the InfiniBand network.

- **A SAN** A storage infrastructure that allows multiple workstations to share simultaneous access to a central storage enclosure.

### About Autodesk Stone Direct Storage

Autodesk Stone Direct XR-series disk arrays provide two types of enclosures: a RAID enclosure (also called an XR enclosure), and an EBOD enclosure (also called an XE enclosure). XR RAID enclosures contain two RAID controllers.

Autodesk Stone Direct uses hardware RAID to provide high performance, reliability, and protection against data loss.

The following table outlines the drive sizes, maximum number of enclosures, and filesystem type supported by each model of Autodesk Stone Direct XR-series storage arrays.

**NOTE** The Stone® filesystem is not supported on HP Z800 workstations.

| Storage model | Max XE enc. per XR | Disk size | Supported Filesystem type |
|---|---|---|---|
| XR146<br>(XR 5402 or XR 5412) | 4 | 146GB | ■ Stone FS, or<br>■ Standard FS |
| XR300<br>(XR 5412) | 4 | 300 GB | ■ Stone FS, or<br>■ Standard FS |
| XR 6412 | 7 | 300 GB or 450 GB | ■ Stone FS, or<br>■ Standard FS |
| XR 6500 | 7 | 450 GB | Standard FS only |

XR 6500 and XR 6412 arrays require a single XR RAID enclosure for 2-loop or 4-loop hardware RAID storage configurations .

XR 5412 and XR 5402 arrays require a single XR RAID enclosure for 2-loop configurations, or two RAID enclosures for 4-loop configurations.

These configurations may include additional XE expansion enclosures, up to the maximum number supported. You can increase storage capacity by adding disk arrays.

A number of Stone Direct configurations will ensure optimal playback of the most demanding formats.

| Storage Configuration | Loops | Expected Peformance |
|---|---|---|
| Stone Direct XR | One 2-loop connection | ■ One stream SD/HD 10-bit (32 channel/8-bits per channel audio), or<br>■ One stream 2K 12-bit unpacked (8 channel/8-bits per channel audio) |
| Stone Direct XR plus Stone Direct XE | Two 2-loop connections (if permitted by chassis)<br>– or –<br>One 2-loop connection | ■ Two streams SD/HD 10-bit (32 channel/8-bits per channel audio), or<br>■ One stream 2K 12-bit unpacked (8 channel/8-bits per channel audio) |
| 2 x Stone Direct XR | Two 2-loop connections (one per enclosure) | ■ Two streams SD/HD 10-bit (32 channel/8-bits per channel audio), or<br>■ One stream 2K 12-bit unpacked (8 channel/8-bits per channel audio) |

## Connecting and Configuring the ATTO Fibre Channel Adapter

Your workstation is configured with a 4-port ATTO Celerity FC-44ES fibre channel adapter in PCI slot one. On the HP xw9400 workstation, the PCI slots are numbered one to seven from top to bottom. Consult the peripherals connection diagram as a reference for the ATTO fibre channel adapter location.

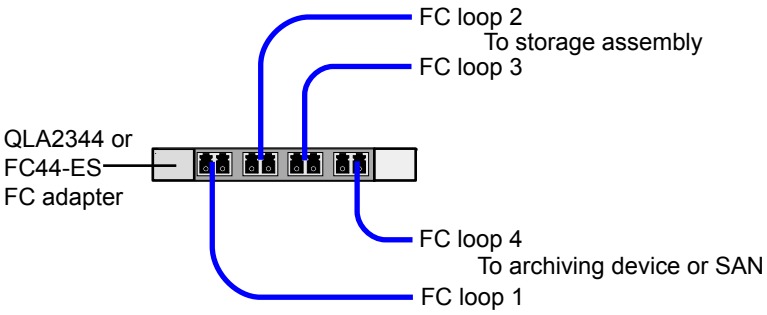


## Connecting Storage Enclosures

The following diagrams illustrate how to cable XR-series hardware RAID storage enclosures. Cable your storage exactly as illustrated to ensure proper functionality.

Note that the XR 6500 series and XR 6412 series storage assemblies do not support configurations with two XR RAID enclosures.

---

**WARNING** Do not power on your storage before installing Linux, otherwise the Red Hat installer might attempt to format the storage array and use it as the system disk.

---

### XR 6500 Wiring Diagrams

The following diagrams illustrate 2-loop and 4-loops connections for XR 6500 series storage assemblies.

A XR 6500 RAID enclosure supports a maximum of seven XE expansion enclosures.

## Single XR 6500 RAID enclosure, 2 loops

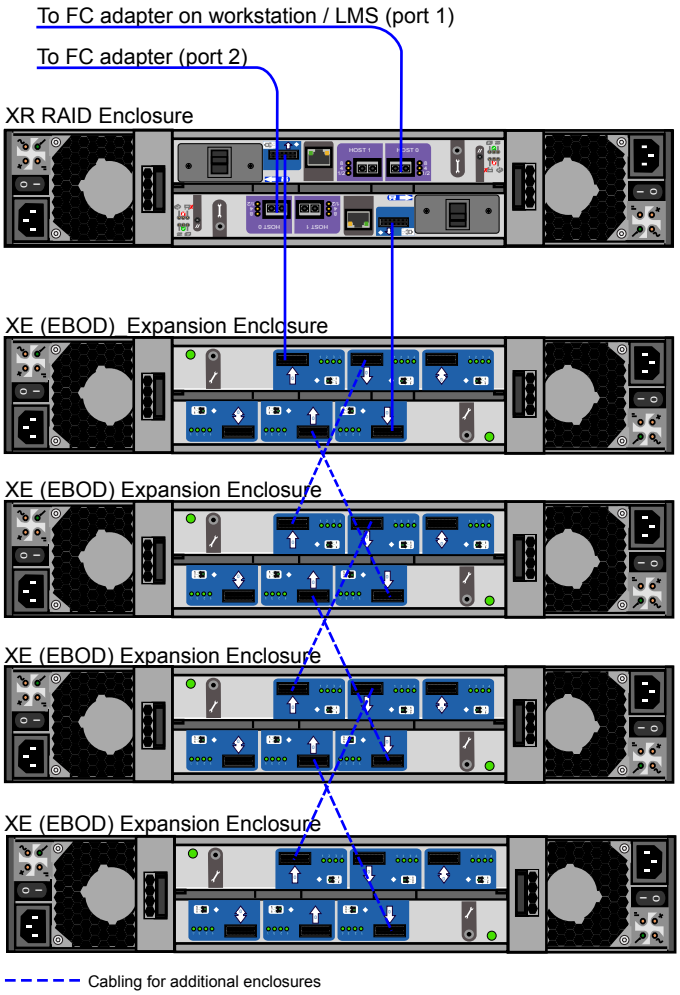

## Single XR 6500 RAID enclosure, 4 loops

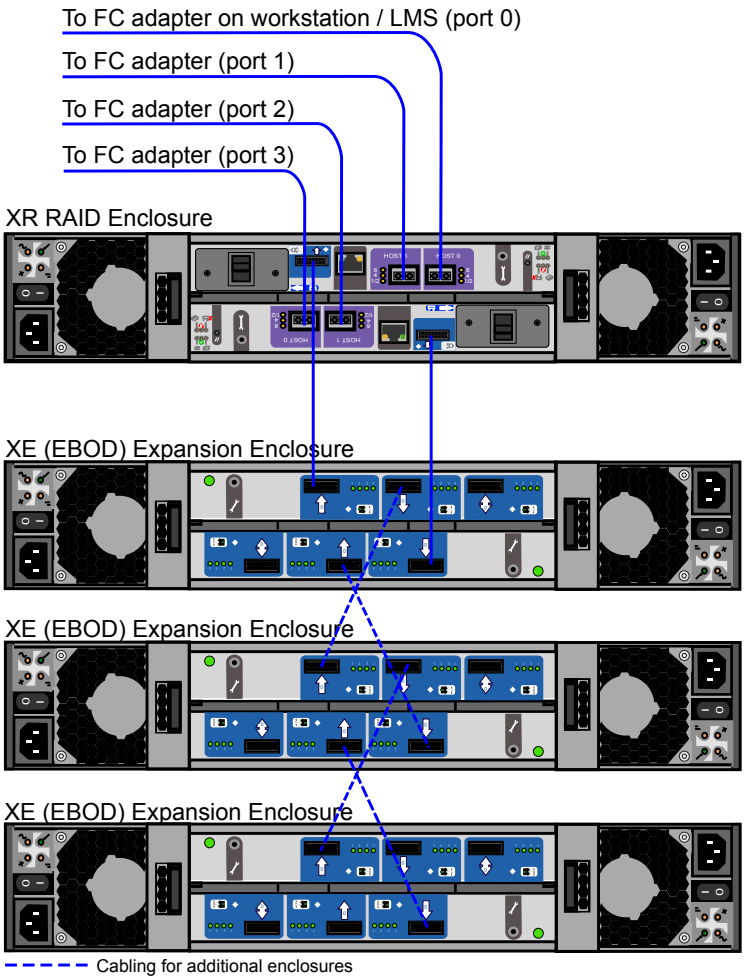


**NOTES:**

- In a 4-loop configuration, you need a minimum of one XE expansion enclosure attached to the XR 6500 RAID enclosure.
- The total number of enlcosures must be an even number.

## XR 6412 Wiring Diagrams

The following diagrams illustrate 2-loop and 4-loops connections for XR 6412 series storage assemblies.

**NOTE** A XR 6412 RAID enclosure supports a maximum of seven XE expansion enclosures.

### Single XR 6412 RAID enclosure, 2 loops

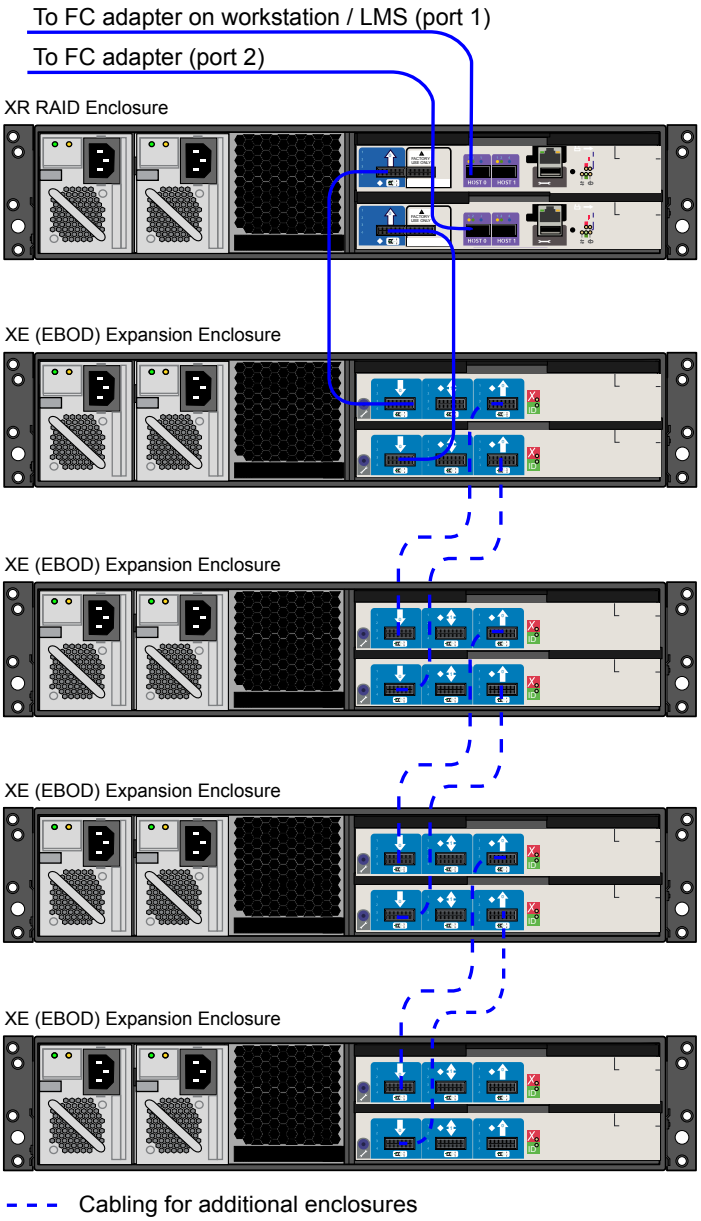

## Single XR 6412 RAID enclosure, 4 loops

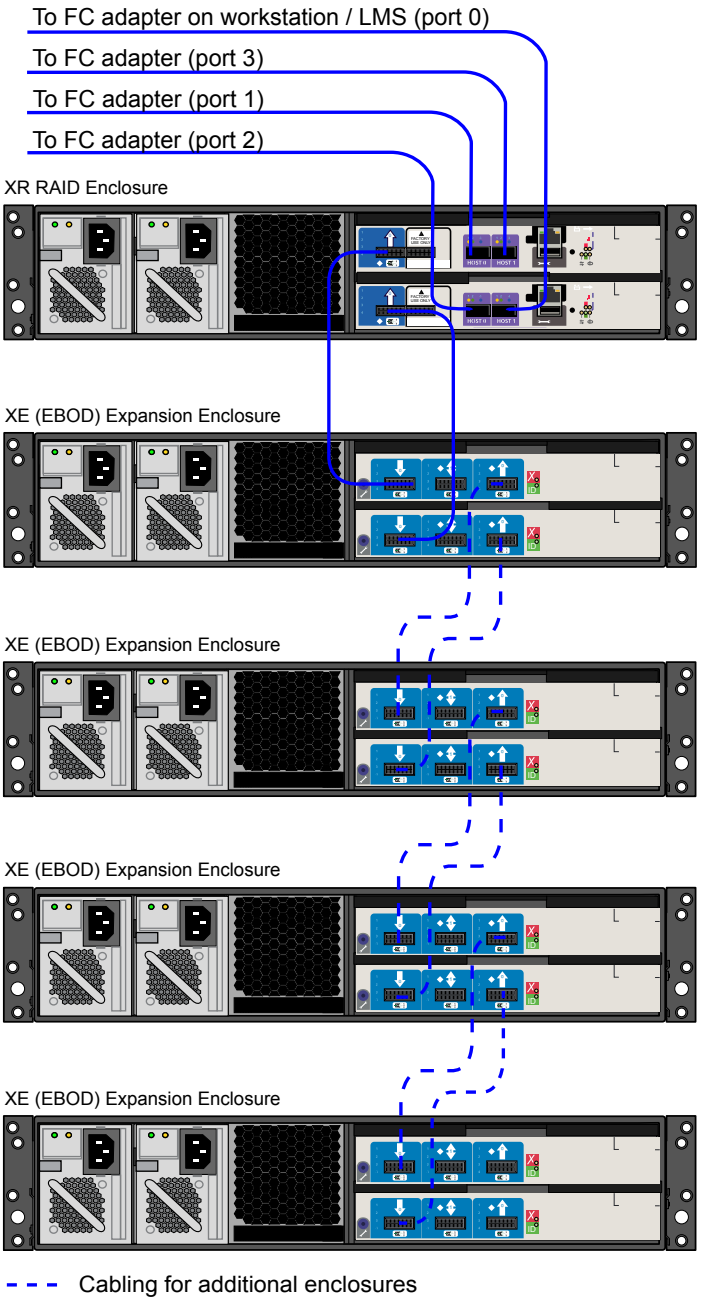


**NOTE** In a 4-loop configuration with a XR 6412 RAID enclosure, you need a minimum of one XE expansion enclosure attached to the XR RAID enclosure.

## XR 5402 and XR 5412 Wiring Diagrams

The following digrams illustrate 2-loop and 4-loop connections for XR 5402 and XR 5412 series storage assemblies.

XR 5402 and XR 5412 series storage assemblies support 2-loop configurations with one XR RAID enclosure, and 4-loop configurations with two XR RAID enclosures.

### Single XR 5402 / 5412 RAID enclosure, 2 loops

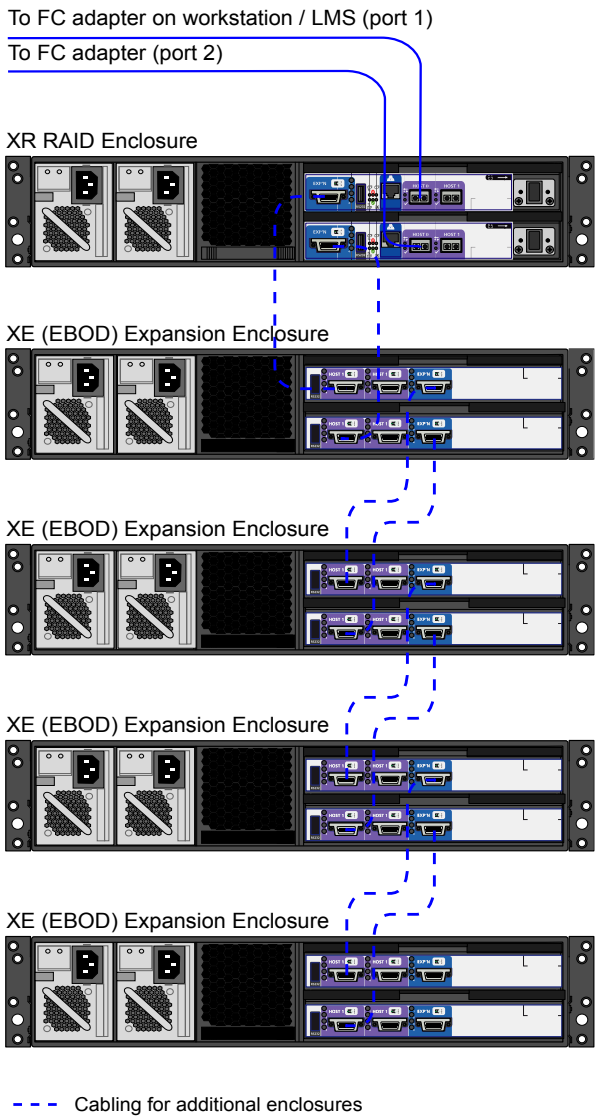


**NOTE** The XR 5402 and XR 5412 RAID enclosures support a maximum of four XE expansion enclosures.

## Two XR 5402 / 5412 RAID enclosures, 4 loops

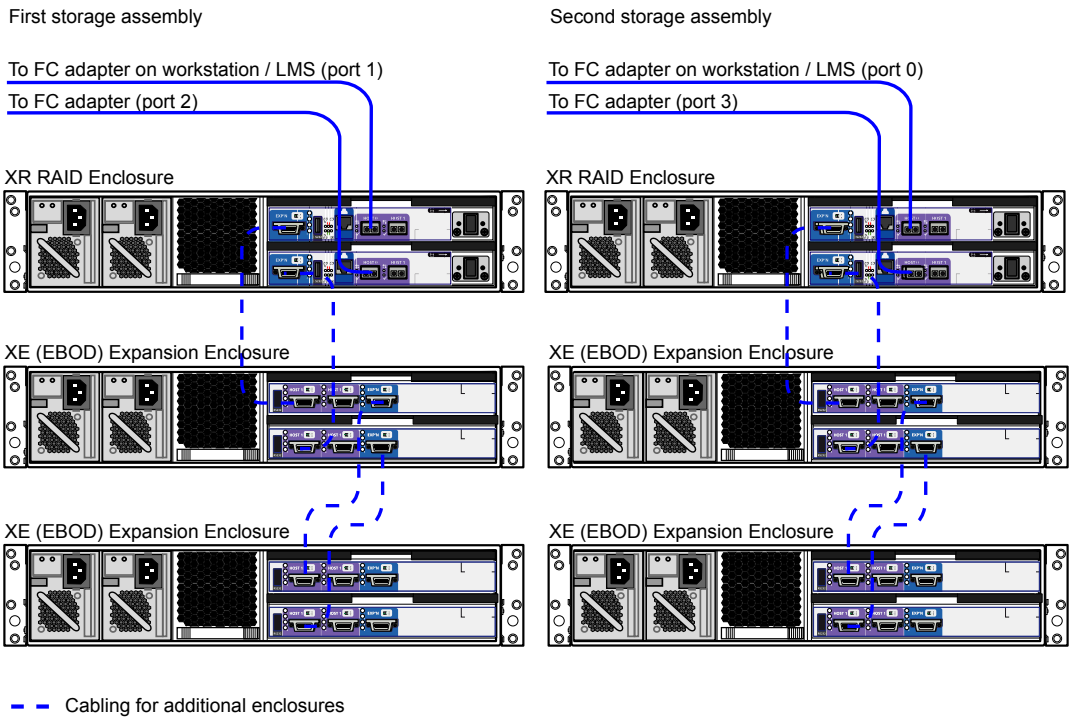


**NOTE** In a configuration with two XR RAID enclosures, the number of XE extension enclosures per XR RAID enclosure must be the same. The total number of enclosures in the storage assembly must be an even number.

# Connecting Archiving Storage

**NOTE** This section does not apply to Autodesk Lustre.

Visual Effects and Finishing applications support archiving to USB 2.0, FireWire® (IEEE 1394) and fibre channel devices. This includes filesystems, VTRs and tape drives. This section discusses the requirements for filesystem and tape drive devices. For information on connecting a VTR, see Connecting Video Components.

## Filesystem Devices

USB 2.0 and FireWire (IEEE 1394) attached devices must be formatted with one of the following filesystems: XFS, ext2, ext3, or HFS (Mac®). NTFS is not supported.

**NOTE** Care must be taken to ensure that the filesystems used to store archives are reliable, stable and properly backed up so as to protect the archive integrity. This functionality is not provided by the application.

## SCSI Tape Drive Devices

SCSI tape drives can be connected to a fibre channel port of the workstation by way of a fibre-channel-to-SCSI bridge, such as the Atto FibreBridge 2390D. The tape drive device must meet two criteria. First, the device's

driver must accept standard UNIX tape device calls. Second, the device must be certified for use with the currently supported version of the workstation operating system and kernel.

While Autodesk Media and Entertainment makes no certification statement about any tape drive device, you can use the "Tape Drive Test" plug-in in Autodesk SystemCentral to test SCSI tape drives for compatibility. For more information, see the *Autodesk System Central User Guide*.

# Index


## A

air conditioning, requirements 5
AJA BOB 18, 20
AJA breakout box 18, 20
AJA HD10DA 20
AJA OEM-2K board 18, 20
Altinex DA1804NT 18
audio
    Discreet Native Audio 29
    hardware components 30
    keywords in software initialisation file 33
    wiring workflow 29

## B

broadcast monitor, wiring 17

## C

configuring, Lucid ADA 88192 converter 31
customer support
    contacting 2

## D

Discreet Native Audio 29
Distribution amplifier 20
documentation
    conventions 2
documentation, set of guides 1
DVI-Ramp 18

## E

EBOD enclosures 35
emulation, setting up VTR 23

## G

graphics board 20
Graphics board 18
graphics monitor 20
Graphics monitor 18

## H

hardware configuration guidelines 4

## I

initialisation file keywords, audio 33

## K

keyboard, connecting 15

## L

LCD graphics monitor 18, 20
Lucid ADA 88192 converter, configuring 31

## M

memory requirements 4
Miranda DVI-Ramp 18
monitor, graphics 20
Monitor, graphics 18
mouse, connecting 15

## N

NVIDIA 5500G 18
NVIDIA Quadro FX 5600 20
NVIDIA Quadro SDI board 20

## P

power, requirements 5

## Q

Quadro 5500G 18
Quadro FX 5600 20

## R

RAID
    enclosures 35

## S

SDI board 20
software initialisation file, audio keywords 33

support
contacting 2

## T

tablet, connecting 15

## V

video hardware components 17
video I/O, wiring 17
VTR emulation, setting up 23

## W

Wire network, connecting to 16
wiring video I/O and broadcast monitor 17
workflow, audio wiring 29
workflow, hardware setup and software installation 3, 7